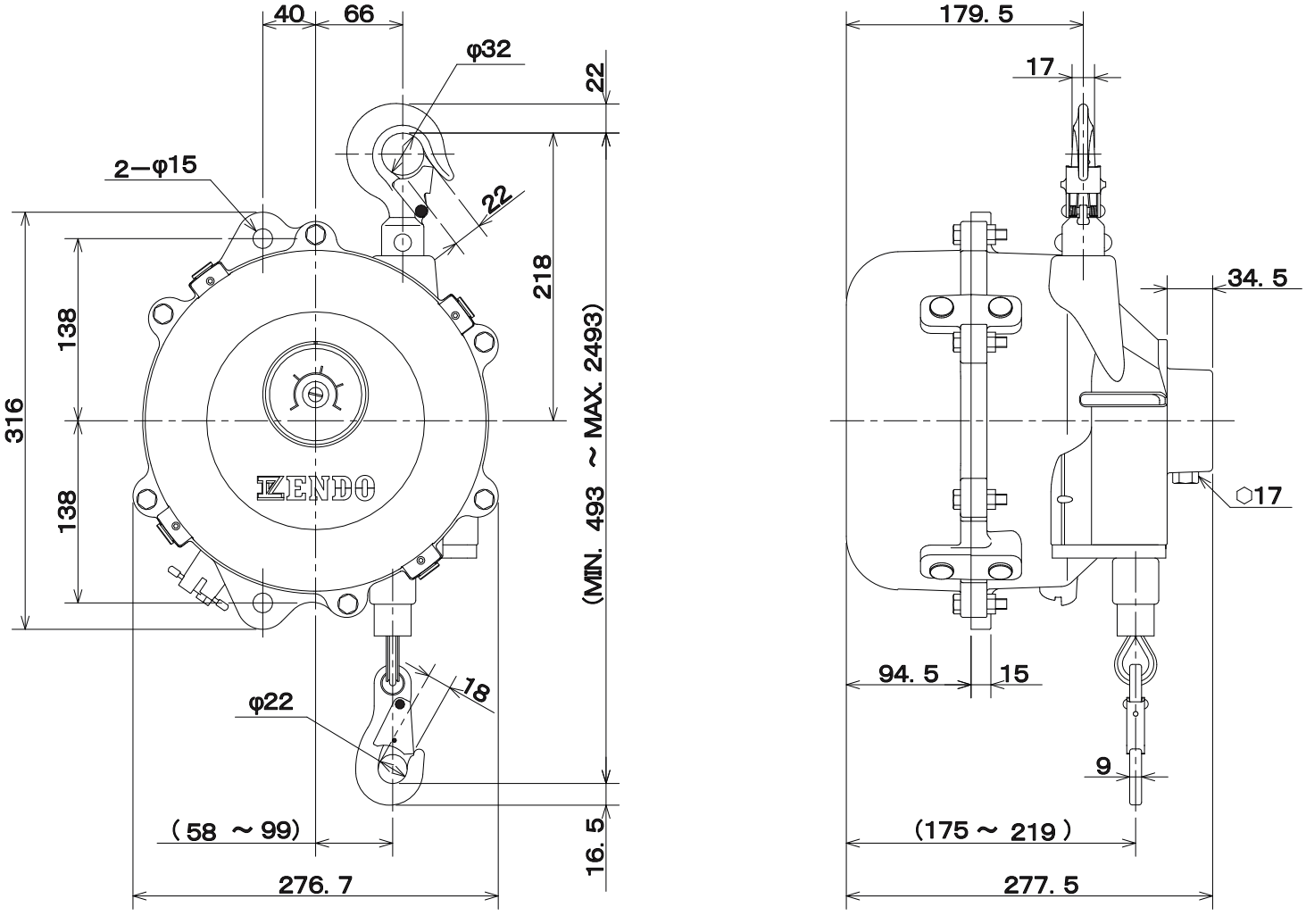

SPRING BALANCER
EWF−105